RV College of Engineering®

Go, change the world

CS355TBE - Quantum Computing

Introduction

Course In charge
Dr.Mohana, Associate Professor
Department of Computer Science & Engineering
RV College of Engineering, Bangalore-560059

Quantum Computing

- Cutting-edge field of computer science
- **Quantum mechanics -** to process information
- Solve problems **exponentially faster** than classical computers.

Ideal for:

  - Cryptography (breaking or creating secure codes)
  - Drug discovery and molecular simulation
  - Optimization problems (logistics, finance, AI training)
  - Material science

- Companies like **IBM, Google, Rigetti, IonQ, Xanadu** are racing toward building large-scale fault-tolerant quantum computers.

Why Quantum Computing

- Quantum computing is required to solve **problems too complex, too time-consuming, or simply impossible for classical computers**—unlocking breakthroughs in science, security, and technology.

Optimization Problems

- Examples: airline scheduling, supply chains, financial portfolio optimization, traffic management.
- Classical methods **may take years**; quantum approaches can find **better solutions much faster**.

Artificial Intelligence & Big Data

- Machine learning models require **huge amounts of computation**.
- Quantum computers can accelerate training and pattern recognition, especially in **high-dimensional data.**

Classical vs Quantum Computing

Feature	Classical Computing	Quantum Computing
Basic Unit	**Bit** – can be 0 or 1	**Qubit** – can be 0, 1, or a superposition of both
Processing	Sequential (step by step)	Parallelism (can explore **many possibilities at once** due to superposition)
Information Storage	Deterministic: one definite state at a time	Probabilistic: multiple states until measured
Key Principle	Based on classical physics (Boolean logic, transistors)	Based on **quantum mechanics** (superposition, entanglement, interference)
Data Representation	Binary states stored in transistors (on/off)	Quantum states represented using **vectors in Hilbert space**
Operations	Logic gates (AND, OR, NOT, XOR)	**Quantum gates** (Hadamard, Pauli, CNOT, Toffoli, etc.)

Error Handling	Errors managed with classical error correction	Very sensitive to noise, requires complex **quantum error correction**
Speed/Power	Efficient for everyday tasks (word processing, browsing, databases)	**Powerful for specialized tasks** (cryptography, molecular simulation, optimization)
Examples	Laptops, smartphones, supercomputers	IBM Quantum, Google Sycamore, IonQ, Xanadu
Stage of Development	Mature, widely used worldwide	Emerging in research & early applications (NISQ era)

In general,

- A **classical computer** is like **reading a book line by line**.
- A **quantum computer** is like reading **all possible pages at once**

Applications of Quantum Computing

1. Cryptography & Cybersecurity

- **Breaking classical encryption:** Shor's algorithm can factor large numbers, threatening RSA and ECC security.
- **Quantum key distribution (QKD):** Provides unbreakable communication channels (used in quantum networks).
- **Post-quantum cryptography:** Developing new encryption methods resistant to quantum attacks.

2. Algorithms & Complexity

- **Quantum search algorithms:** Grover's algorithm speeds up searching in large databases.
- **Optimization algorithms:** Faster solutions for scheduling, routing, and resource allocation.
- **Machine learning & AI:** Quantum ML models for faster training and better handling of big data.

Applications of Quantum Computing

3. Software Engineering & Simulation

- **Quantum simulators:** Simulating quantum systems directly
- **Programming frameworks:** Qiskit (IBM), Cirq (Google), and Quipper are quantum programming languages.
- **Verification & testing:** New methods for debugging and testing quantum software.

4. Engineering & Applied Sciences

- **Electrical & Electronics Engineering:**
  - Quantum sensors for precise measurements.
  - Quantum communication systems (satellite-based secure communication).
- **Mechanical & Civil Engineering:**
  - Optimization of structural designs.
  - Simulation of materials with quantum-level accuracy.
- **Chemical & Materials Engineering:**
  - Discovering new materials, catalysts, and superconductors.
  - Drug discovery through molecular simulation.
- **Computer Engineering:**
  - Development of **specialized quantum processors.**
  - Quantum error correction hardware.

Applications of Quantum Computing

5. Emerging Applications

- **Artificial Intelligence & Data Science:** Quantum-enhanced neural networks and clustering.
- **Networking:** Quantum internet (secure communication).
- **Energy:** Simulation of nuclear fusion and efficient energy materials.
- **Healthcare:** Protein folding simulations for **drug/vaccine development.**

- Quantum computing in computer science and engineering enables **faster algorithms, stronger security, smarter AI, accurate simulations, and optimized engineering solutions**.

Unit 1

Unit-I	09 Hrs
Quantum Building Blocks: Quantum mechanics of Photon Polarization, Single Quantum bits, Single Qubit Measurement, A Quantum key Distribution Protocol, State Space of a Single-Qubit System, Direct Sums and Tensor Products of Vector Spaces, State Space of an n-Qubit System, Entangled States, MultiQubit Measurement, QKD using Entangled states.	

Unit 1 Learning Objectives

- **Understand** the quantum mechanical principles of photon polarization and its use in representing qubits.
- **Explain** the concept of a **single qubit**, its **state space**, and perform single-qubit measurement analysis.
- **Apply** linear algebra concepts — such as vector spaces, direct sums, and tensor products — to describe quantum systems mathematically.
- **Construct and interpret** the **state space of n-qubit systems**, including representation using Dirac notation.
- **Analyze** the nature and significance of **entangled states** in quantum communication and computation.
- **Demonstrate** understanding of **Quantum Key Distribution (QKD)** protocols, particularly those using entangled states, to illustrate secure information exchange.
- **Relate** **quantum measurement principles** to real-world applications in quantum cryptography and quantum networks.

What is Quantum Computing?

- New paradigm of computation based on the **principles of quantum mechanics** — explains how particles like electrons and photons behave at atomic and subatomic levels.
- Quantum computers use **qubits (quantum bits)** that can exist in multiple states at once.
- **Quantum Computing = Physics (Quantum Mechanics) + Mathematics (Linear Algebra) + Computer Science (Algorithms & Logic)**
- It's a multidisciplinary field aiming to **revolutionize computing** by leveraging the laws of nature itself.

Quantum Bit (Qubit)

- A **qubit** is the basic unit of quantum information — the quantum analogue of a classical bit.
- Unlike a bit that can be either 0 or 1, a qubit can exist in a **superposition** of both.

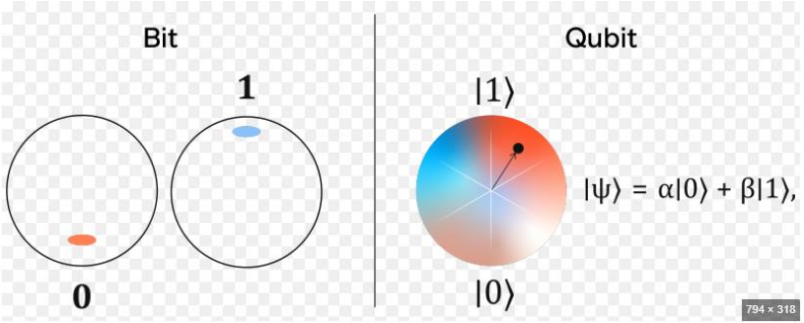

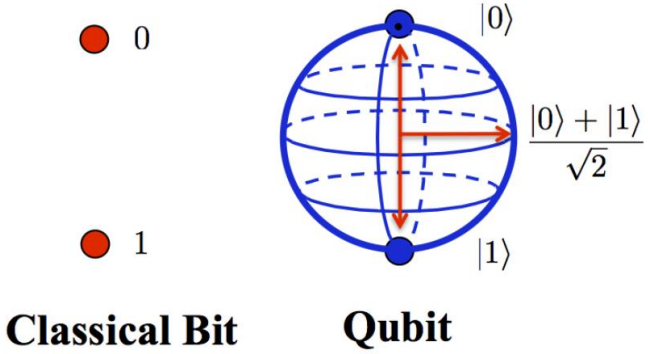

Superposition

- A quantum state can exist in multiple states simultaneously until measured.
- It allows quantum computers to process many possibilities at once.

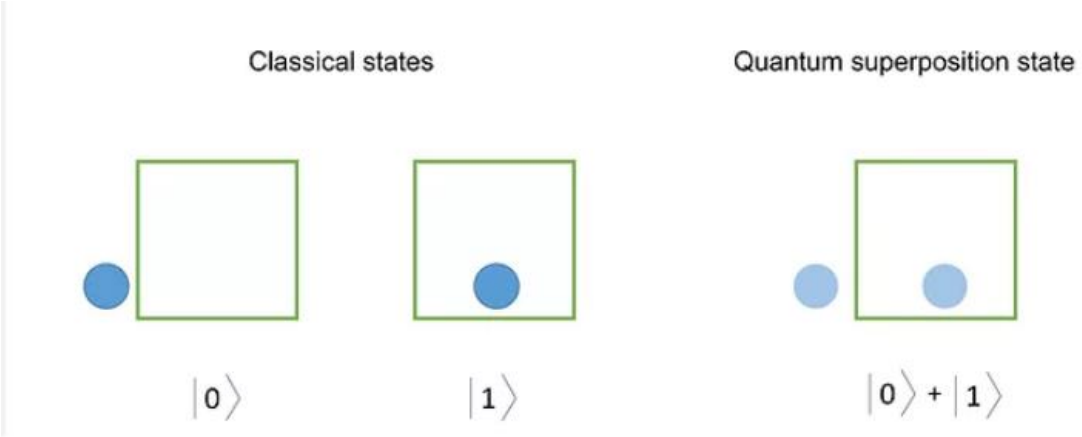

- Superposition allows **quantum parallelism**, enabling a quantum computer to evaluate **many possibilities simultaneously**

- Superposition is the **quantum phenomenon** where a particle (like a qubit) **can exist in** multiple states at once — **until it is measured**.
- In classical computing, a bit = 0 *or* 1.
  In quantum computing, a qubit = 0 **and** 1 *simultaneously*.

Example:

- A classical coin: **Heads or Tails**
- A quantum coin: **Heads + Tails at the same time**
- Only when observed → collapses to **Heads** or **Tails** with certain probability

Quantum Measurement

- Measurement collapses a qubit's superposition into one definite classical state (0 or 1).
- The probability of each outcome depends on the square of its amplitude.
- 0 with probability ½ and 1 with probability ½.

Entanglement

- A quantum phenomenon where **two or more qubits become linked** such that the state of one depends on the state of another, even across large distances.

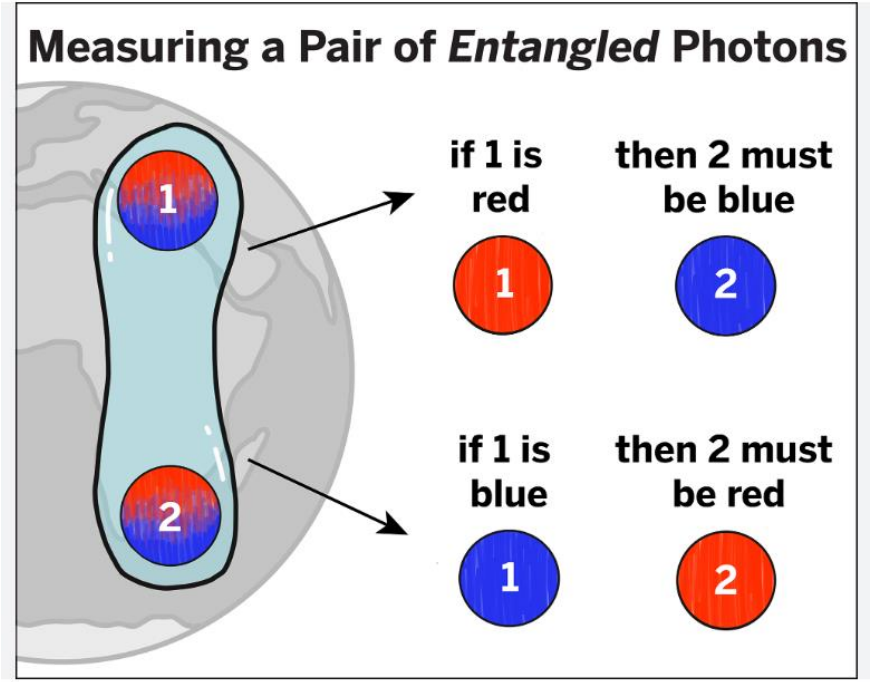

- Entanglement is a **special correlation** between two or more qubits where the **state of one instantly affects the other**, even when they are far apart.
- Once entangled, qubits behave as **a single system**, not as individual particles.

Example:

- Imagine two dice that always show the same number when rolled — even if one is in India and the other is on Mars!
- That's entanglement — **instant correlation beyond classical limits**.
- Entanglement enables:

  Quantum teleportation

  Quantum key distribution (QKD)

  Quantum speed-up in many algorithms (e.g., Grover's, Shor's)

Quantum State Space

- The **set of all possible quantum states** a system can occupy. For an **n-qubit system**, the **state space dimension** is

$$\boxed{\text{State space dimension of an n-qubit system} = 2^n}$$

Example:

1 qubit → 2 states: $|0\rangle$, $|1\rangle$

2 qubits → 4 states: $|00\rangle$, $|01\rangle$, $|10\rangle$, $|11\rangle$

Dirac (Bra–Ket) Notation

Definition:
A compact **notation used to represent quantum states** and **operations**.

- **Ket $|\psi\rangle$:** Represents a column vector (state).
- **Bra $\langle\psi|$:** Represents the conjugate row vector.

Tensor Product and Direct Sum

Tensor Product

- A mathematical operation used to **combine two vector spaces or qubits into a larger system**.
- Used to describe **multi-qubit states**.

Direct Sum

- A mathematical operation used to combine vector spaces where the **elements are independent and not entangled**.

Quantum Gate

- A **unitary matrix** that changes the **state of a qubit** — analogous to logic gates in classical computing.
- Quantum gates are **reversible**.

Common Gates and Examples:

- **Pauli-X gate (NOT):** Flips $|0\rangle \rightarrow |1\rangle$, $|1\rangle \rightarrow |0\rangle$
- **Hadamard gate (H):** Creates superposition
- **CNOT gate:** Entangles two qubits.

Quantum Gate - Examples

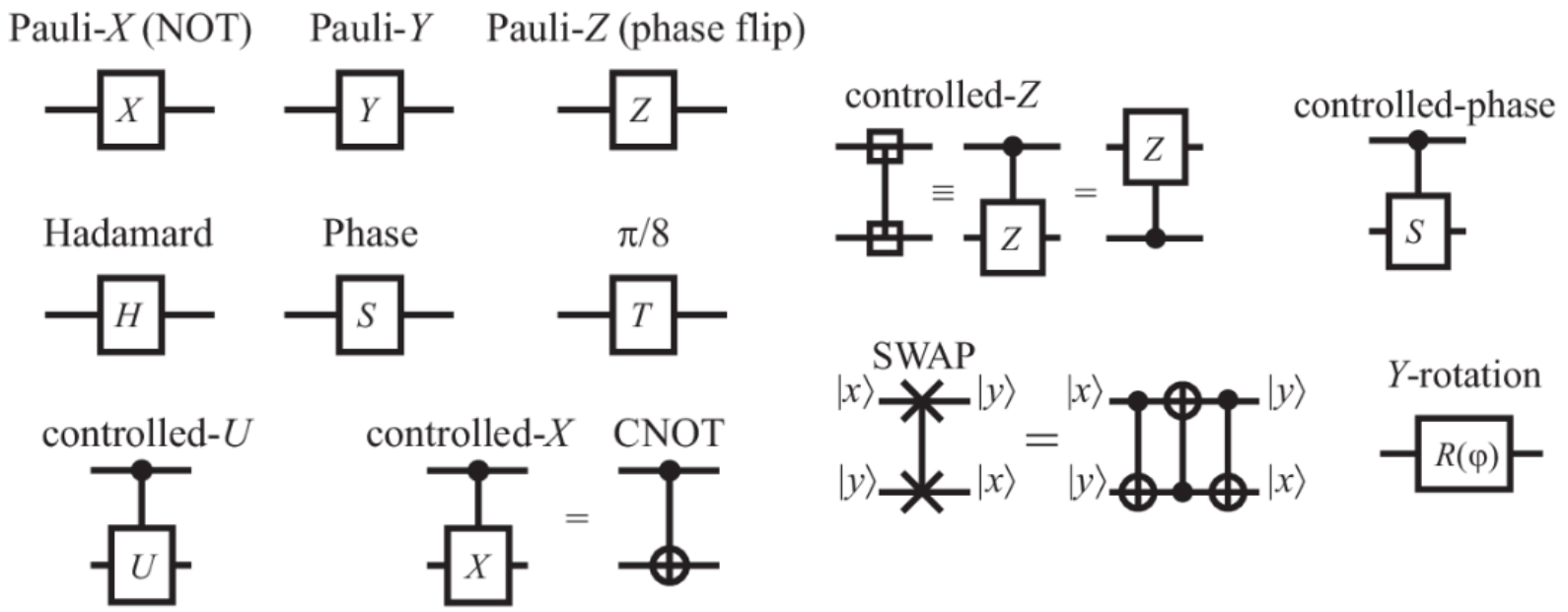

Multi-Qubit Measurement

- Measuring more than **one qubit simultaneously**, often to detect correlations or entanglement between them.

Example:

Measuring both qubits of an entangled pair $|\Phi^+\rangle$ yields either **00** or **11** — never 01 or 10.

Quantum Interference

- When probability amplitudes of different paths combine — constructive interference enhances correct answers; destructive cancels wrong ones.

Example:
Used in **Grover's algorithm** to amplify the probability of the correct search result.

Quantum Algorithm

- A step-by-step quantum procedure for **solving computational problems** faster than classical methods.

Examples:

- **Shor's Algorithm:** Factorizes large numbers (useful for breaking RSA encryption).
- **Grover's Algorithm:** Speeds up unsorted database search.

Quantum Decoherence

- Loss of quantum behavior (superposition/entanglement) due to interaction with the external environment.

Example:

A photon qubit interacting with air molecules may **lose coherence**, becoming a classical bit.

Bloch Sphere

Definition:

A 3D graphical representation of a qubit's state.

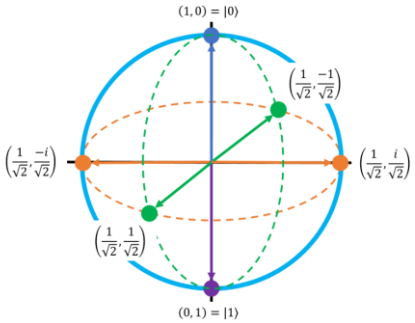

- $|0\rangle \rightarrow$ north pole
- $|1\rangle \rightarrow$ south pole
- Superposition states **lie anywhere on the sphere's surface**.

Example:

A Hadamard gate moves $|0\rangle$ to a point on the equator (equal superposition).

https://stem.mitre.org/quantum/quantum-concepts/bloch-sphere.html

Unitary Matrix

A **unitary matrix** U is a **complex square matrix** that satisfies the condition:

$$U^\dagger U = U U^\dagger = I$$

where

- $U^\dagger$ = **conjugate transpose** (Hermitian adjoint) of U
- I = **identity matrix**

All quantum gates are **unitary, ensuring reversibility and preservation of probability**

Quantum Circuit

Definition:

A sequence of quantum gates acting on qubits to perform a computation or algorithm.

Example:

Hadamard + CNOT gates can create an entangled Bell state.

Quantum Teleportation

Definition:

A protocol for transmitting a **qubit's state from one location to another** using **entanglement and classical communication.**

Example:

Alice sends an unknown qubit state to Bob using a shared entangled pair.

Hilbert Space

- A **Hilbert Space** is a **mathematical framework** used to describe **quantum states**.
- It provides the **"space"** where all possible states of a quantum system live.
- A **Hilbert space** is like a multi-dimensional coordinate system where each **quantum state is a vector**.
- A **Hilbert Space ($\mathscr{H}$)** is a *complete vector space* equipped with an **inner product**, which allows you to compute:

  Length (norm) of a vector (state)

  Angle (orthogonality) between vectors (states)

Quantum Interference

- Quantum interference occurs when **probability amplitudes** of quantum states **combine** (add or cancel each other), affecting the probability of measurement outcomes.
- Like water waves — they can interfere **constructively** (amplify) or **destructively** (cancel out).

Example:

- In a **double-slit experiment**, a photon can take two paths at once:
  - The two paths interfere with each other.
  - Some outcomes are strengthened, others vanish.
- Similarly, in a quantum algorithm:
  - Correct answers are **amplified** (constructive interference)
  - Wrong answers are **cancelled** (destructive interference)

Significance:

Concept	Role in Quantum Computing	Analogy
Superposition	Enables parallel processing of many states	A spinning coin showing heads and tails at once
Entanglement	Links qubits for complex, shared behavior	Two dancers moving in perfect sync, even apart
Interference	Selects correct results, cancels wrong ones	Noise-cancelling headphones removing unwanted signals

Example: Grover's Algorithm (Quantum Search)

Superposition → create all possible database states simultaneously.

Oracle → marks the correct solution by changing its phase. black-box operation (or unitary operator) used to encode information about a specific problem or function that we want to query or test efficiently.

Interference → amplifies the probability of the correct state.

Measurement → collapses to the correct answer with high probability.

In Short:

- **Superposition** = Power (many states at once)
- **Entanglement** = Connection (correlated qubits)
- **Interference** = Precision (amplify correct answers)

Together, these three principles make **quantum computing** **exponentially more powerful** than classical computation.

Example

https://www.researchgate.net/publication/353528286_Quantum_Computing_Opportunities_in_Renewable_Energy/figures?lo=1

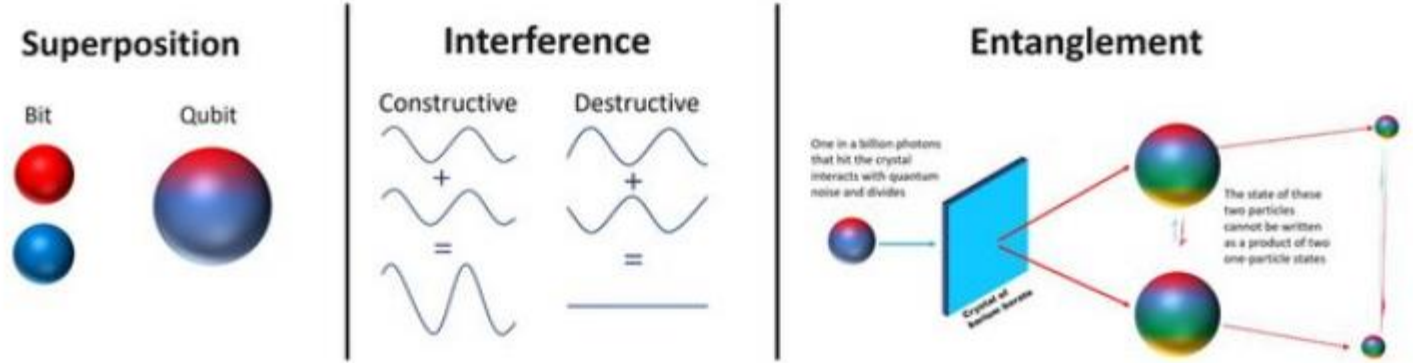

A simple graphical representation of some of the quantum features enabling quantum computing. Superposition is the ability to exist in two different states at the same time. Interference refers to wave properties of adding and subtracting magnitude which allows state manipulation. Entanglement allows distinct qubits to be bounded.

Quantum Gates and Circuits

- Quantum operations are represented by **unitary matrices**.
- Basic quantum gates include:
  - **Hadamard Gate (H):** Creates superposition.
  - **Pauli Gates (X, Y, Z):** Analogous to classical NOT and phase operations.
  - **CNOT Gate:** Introduces entanglement between two qubits.
- A **Quantum Circuit** combines **these gates to form algorithms**.

Quantum Gates and Circuits - Example

Operator	Gate(s)		Matrix
Pauli-X (X)	X	$\oplus$	$\begin{bmatrix} 0 & 1 \\ 1 & 0 \end{bmatrix}$
Pauli-Y (Y)	Y		$\begin{bmatrix} 0 & -i \\ i & 0 \end{bmatrix}$
Pauli-Z (Z)	Z		$\begin{bmatrix} 1 & 0 \\ 0 & -1 \end{bmatrix}$
Hadamard (H)	H		$\frac{1}{\sqrt{2}}\begin{bmatrix} 1 & 1 \\ 1 & -1 \end{bmatrix}$
Phase (S, P)	S		$\begin{bmatrix} 1 & 0 \\ 0 & i \end{bmatrix}$
$\pi/8$ (T)	T		$\begin{bmatrix} 1 & 0 \\ 0 & e^{i\pi/4} \end{bmatrix}$
Controlled Not (CNOT, CX)			$\begin{bmatrix} 1 & 0 & 0 & 0 \\ 0 & 1 & 0 & 0 \\ 0 & 0 & 0 & 1 \\ 0 & 0 & 1 & 0 \end{bmatrix}$
Controlled Z (CZ)	Z		$\begin{bmatrix} 1 & 0 & 0 & 0 \\ 0 & 1 & 0 & 0 \\ 0 & 0 & 1 & 0 \\ 0 & 0 & 0 & -1 \end{bmatrix}$
SWAP			$\begin{bmatrix} 1 & 0 & 0 & 0 \\ 0 & 0 & 1 & 0 \\ 0 & 1 & 0 & 0 \\ 0 & 0 & 0 & 1 \end{bmatrix}$
Toffoli (CCNOT, CCX, TOFF)			$\begin{bmatrix} 1 & 0 & 0 & 0 & 0 & 0 & 0 & 0 \\ 0 & 1 & 0 & 0 & 0 & 0 & 0 & 0 \\ 0 & 0 & 1 & 0 & 0 & 0 & 0 & 0 \\ 0 & 0 & 0 & 1 & 0 & 0 & 0 & 0 \\ 0 & 0 & 0 & 0 & 1 & 0 & 0 & 0 \\ 0 & 0 & 0 & 0 & 0 & 1 & 0 & 0 \\ 0 & 0 & 0 & 0 & 0 & 0 & 0 & 1 \\ 0 & 0 & 0 & 0 & 0 & 0 & 1 & 0 \end{bmatrix}$

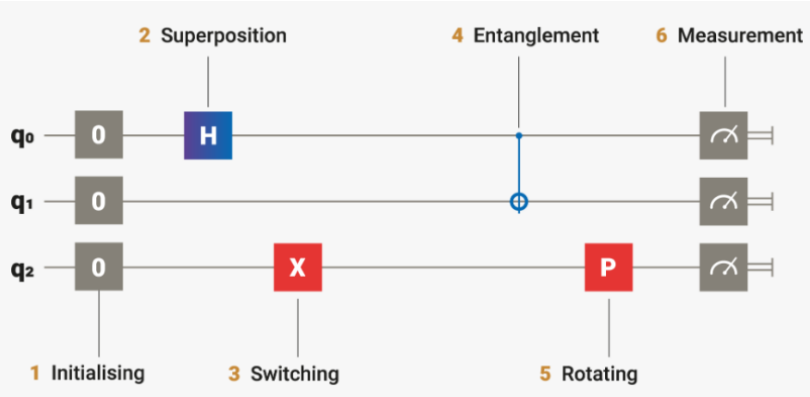

Moore's law & its end

- In 1965, Gordon E. Moore—co-founder of Intel – **"the number of transistors in a IC chip doubles about every eighteen months".**
- Moore predicted that it would continue to improve at an **exponential rate for every 2 years.**
- The present limit is approximately **10^8 transistors per chip** and the typical size of circuit components is of the order of **100 nanometers.**
- we have reached the atomic size for storing a single bit of information and quantum effects have become unavoidably dominant.
- Alternative ways of computing methods.

Moore's law & Future of Computers

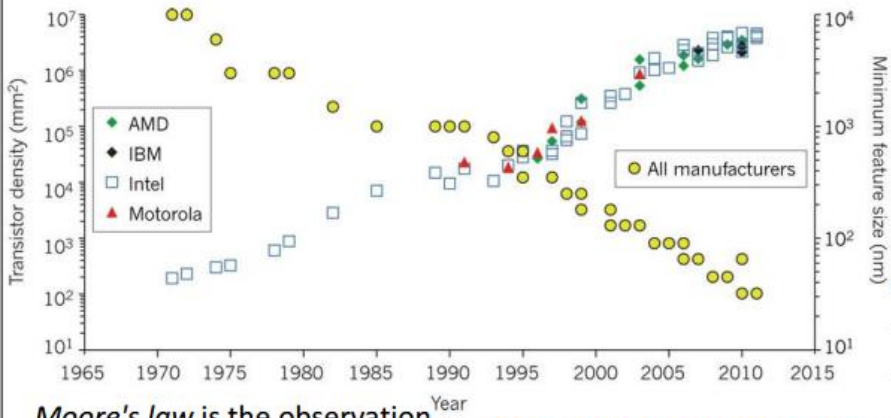

Moore's law is the observation that the number of transistors in a dense integrated circuit doubles about every two years.

Moore's law will soon run into major physical constraints!

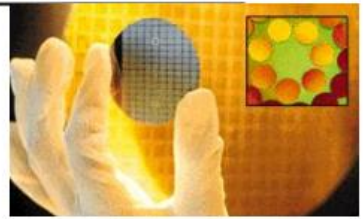

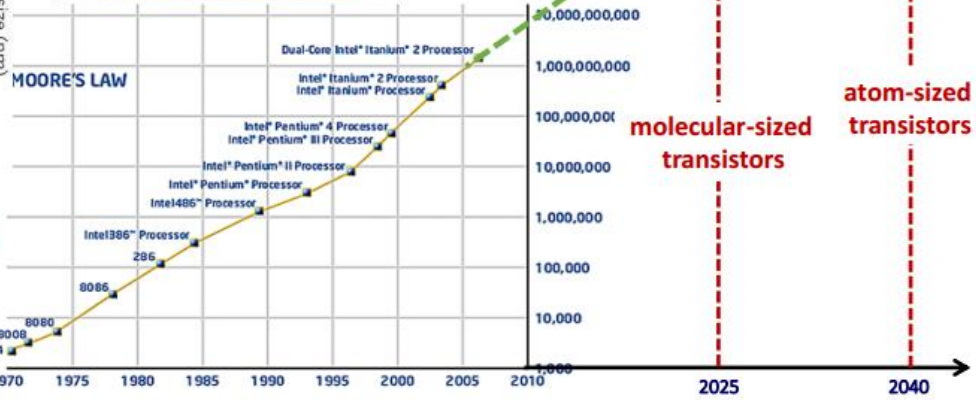

Moore, G. E. *Electronics* **8**, 114–117 (1965).
Image from: Ferain, I. *et al.*, *Nature* **479**, 310–316 (2011).

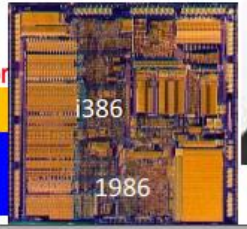

Richard Feynman

"There's Plenty of Room at the Bottom" (1959)

"When we get to the very, very small world – say circuits of seven atoms – we have a lot of new things that would happen that represent **completely new opportunities for design**.
Atoms on a small scale behave like nothing on a large scale, for they satisfy the laws of quantum mechanics…"

Evolution of Quantum Theory & Quantum Technology

The Foundations

From Theory to Practice

Commercialization & Application

1900's

1925: Schrödinger Equation proposed

1929: Dirac, one of the founders of quantum physics writes that physicists now know all laws necessary to simulate chemical systems

1935: The **EPR paradox** is a thought experiment intended to demonstrate an inherent paradox in the early formulations of quantum theory; it is among the best-known examples of quantum entanglement

1965: Feynman's theories of quantum-electro-dynamics

1980

1981: Feynman proposes quantum phenomenon to perform computations

1984: Quantum cryptography (IBM)

1994: **Shor's Algorithm** for finding prime factors sparks huge interest in quantum computing

1996: Grover's database search algorithm

1998: **First working 2-qubit quantum computer** demonstrated

2001: Using a 7-qubit computer researchers at IBM/Stanford factor the number 15

2004/5: First photon entanglement + **first quantum byte** (qubyte)

2010

2010: D-Wave announces **first commercially available QC**

2016: IBM makes a 5-qubit QC available to developers & researchers for experimentation via its **cloud** portal

Jan 2017: D-Wave makes 2000Q system commercially available

May 2017: IBM announces 16-qubit machine available in the cloud

Sep 2017: Microsoft reveals quantum programming language

Oct 2017: Google announces OpenFermion: Open source chemistry package for QC

Nov 2017: IBM announces 20-qubit machine available in cloud & first working 50-qubit processor

2018: Intel confirms development of 49-qubit chip

2019: Google claims to have reached **quantum supremacy** for the first time

2019: IBM launches first commercial 20-qubit QC

2020: Chinese scientists claimed 100 trillion faster of quantum supremacy

2021

What does a quantum computer look like?

Chinese 76-qubit photon-based quantum computer

IonQ, ion-trap-based 32-qubit quantum computer

IBM 53-qubit superconductor-based quantum computer

Quantum Computing Race - Corporations

R&D investments reach $10.7 billion by 2024

THE EUROPEAN QUANTUM COMPUTING STARTUP LANDSCAPE

YEAR 2020

Hardware

Computing

OQC, Alice & Bob, AQT, IQM, ORCA Computing, Oxford Ionics, Universal Quantum, eleQtron, the noon project, Quantum Motion, NextGenQ

Components & Materials

AegiQ, QBLOX, quantum technology supersensors, nu Quantum, MIRAEX, kiutra, Delft Circuits, Qnami, QDevil, Quandela, Toridion

Software

Operating Systems

QBaltic, QM Quantum Machines, Quantastica, Riverlane, ParityQC

Applications

Security & Encryption

QUSIDE, PHASECRAFT, QuBalt, InfiniQuant, Quantumz.io, QuantLR, Quantum Impenetrable, Crypta Labs, Kronus, ArQit, Dawn Data Technologies, QuantiCor, PQSHIELD, KETS, Quantum Base, Crypto Quantique, CryptoNext Security, Quantopticon

Chemistry & Pharma

HQS Quantum Simulations, KUANO, rahko, CQC Cambridge Quantum Computing, Ketita, ChemAlive, Apexqubit, Qu&Co, Pharmacelera, Creative Quantum

Others

VeriQloud, Avanetix, QuantFi, Multiverse Computing, Quantum, Terra Quantum, shyn

Quantum supremacy

- quantum computer performs a specific computational task that is practically impossible for even the most powerful classical supercomputers.
- Coined by John Preskill in 2012, this achievement demonstrates a quantum computer's ability to outperform classical machines for certain problems, though it is not a general-purpose superiority.
- For example, in 2019, Google's *Sycamore processor* performed a calculation in about 200 seconds that would have taken the world's fastest supercomputer an estimated 10,000 years.

Brief History of Quantum Computers

- 1981: Richard Feynman proposed to use quantum computing to model quantum systems. He also describe theoretical model of quantum computer
- 1985: David Deutsch described first universal quantum computer
- 1994: Peter Shor developed the first algorithm for quantum computer (factorization into primes)
- 1995 Schumacher proposed "Quantum bit" or "qubit" as physical resource
- 1996: Lov Grover developed an algorithm for search in unsorted database
- 1998: the first quantum computers on two qubits, based on NMR (Oxford; IBM, MIT, Stanford)
- 2000: quantum computer on 7 qubits, based on NMR (Los-Alamos)
- 2001: 15 = 3 x 5 on 7- qubit quantum computer by IBM
- 2005-2006: experiments with photons; quantum dots; fullerenes and nanotubes as "particle traps"

- 2007: D-Wave announced the creation of a quantum computer on 16 qubits
- 2012: D-Wave claimed a quantum computation using 84 qubits
- 2017: D-Wave Systems Inc. announced the D-Wave 2000Q quantum annealer with 2000 qubits
- 2017: Microsoft revealed Q Sharp with 32 qubits
- 2018: Google announced the creation of a 72-qubit quantum chip
- 2019: Google claimed quantum supremacy with 54 qubits to perform operations in 200 seconds that would take a supercomputer about 10,000 years to complete
- 2019: IBM revealed 53 qubits
- 2020: Chinese researchers claimed to have achieved quantum supremacy using a photonic 76-qubit system at 100 trillion times the speed of classical supercomputers
- 2020: IBM will build 1121-qubit quantum computer in 2023, and 1 million-qubit quantum computer in 2030.

Concept of bit and qubit

bit

- Digital computer stores and processes information - either 0 or 1.
- bit can be anything that has **two distinct configurations**.

qubit

- physical **carrier of quantum information**.
- It is the **quantum version of a bit**
- quantum state can be written in terms of two levels, labelled **$|0\rangle$** and **$|1\rangle$**

$|\ \rangle$ this notation is known as 'ket' notation

$\langle\ |$ is known as 'brac' notation.

Both are together called as **Dirac notations**

qubit

- **'Ket'** are analogous to a column vector.
- They are also called **basis vectors** and represented by two-dimensional column vectors.

$$|0\rangle = \begin{bmatrix} 1 \\ 0 \end{bmatrix} \text{ and } |1\rangle = \begin{bmatrix} 0 \\ 1 \end{bmatrix}$$

- The qubit can be in **any one of the two states** as well as in the superposed state simultaneously.
- In quantum computation two distinguishable states of a system are needed to represent a bit of data.

Example: two states of an electron orbiting a single atom.

- Spin up is taken as $|1\rangle$ and spin down is taken as $|0\rangle$.
- Similarly ground state energy level is $|0\rangle$ and excited state level is $|1\rangle$

Properties of qubits

1. Qubits make use of discrete energy state particles such as electrons and photons.
2. Qubits exists in two quantum state $|0\rangle$ and $|1\rangle$ or in a linear combination of both states. This is known as superposition.
3. Unlike classical bits, qubit can work with the overlap of both 0 & 1 states.

   For ex, a 4-bit register can store one number from 0 to 15 (because of $2^n = 2^4=16$), but 4-qubit register can store all 16 numbers.
4. When the qubit is measured, it collapses to one of the two basis states $|0\rangle$ or $|1\rangle$
5. Quantum entanglement and quantum tunnelling are two exclusive properties of qubit.
6. State of the qubits is represented using Bloch sphere.

Single-Qubit Quantum Systems

- A **qubit** (quantum bit) is the fundamental unit of quantum information.
  - A **classical bit** can exist in either state **0** or **1**.
  - A **quantum bit (qubit)** can exist in a **superposition** of states:

$$|\psi\rangle = \alpha|0\rangle + \beta|1\rangle$$

where:

- $|0\rangle = \begin{bmatrix} 1 \\ 0 \end{bmatrix}$ (basis state 0)
- $|1\rangle = \begin{bmatrix} 0 \\ 1 \end{bmatrix}$ (basis state 1)
- $\alpha, \beta \in \mathbb{C}$ (complex numbers, probability amplitudes)
- Normalization: $|\alpha|^2 + |\beta|^2 = 1$

Photon Polarization:

Photon: A photon is a quantum particle of light — an elementary particle carrying electromagnetic energy.

Polarization: It refers to the **direction of the oscillation** of the photon's electric field.

Photon as a Qubit:

- A photon is a quantum of light with spin = 1.
- Its polarization (direction of its electric field oscillation) can encode a **qubit**.
- Two orthogonal polarization states form the **computational basis**:
  - **Horizontal (H):** $|H\rangle = \begin{bmatrix} 1 \\ 0 \end{bmatrix}$
  - **Vertical (V):** $|V\rangle = \begin{bmatrix} 0 \\ 1 \end{bmatrix}$

Physical Meaning	Quantum Notation	Dirac Notation	Vector Representation
Horizontal polarization	H	(	0))
Vertical polarization	V	(	1))

Superposition of Polarizations:

- Just like qubits, photons can exist in superpositions.

$$|\psi\rangle = \alpha|H\rangle + \beta|V\rangle, \quad |\alpha|^2 + |\beta|^2 = 1$$

Examples:

- **Diagonal polarization** (45°):

$$|D\rangle = \frac{1}{\sqrt{2}}(|H\rangle + |V\rangle)$$

- **Anti-diagonal polarization** (-45°):

$$|A\rangle = \frac{1}{\sqrt{2}}(|H\rangle - |V\rangle)$$

- **Right-circular polarization (R):**

$$|R\rangle = \frac{1}{\sqrt{2}}(|H\rangle + i|V\rangle)$$

- **Left-circular polarization (L):**

$$|L\rangle = \frac{1}{\sqrt{2}}(|H\rangle - i|V\rangle)$$

polarization states

1. **Dirac notation** ($|\psi\rangle$)
2. **Vector representation** in the basis $|H\rangle, |V\rangle$.

Photon polarization is one of the most practical physical realizations of qubits — bridging quantum mechanics, optics, and information theory.

Polaroid

- A **Polaroid** is a type of optical filter that allows light polarized in **one direction** to pass through, while absorbing or blocking light polarized in the **perpendicular direction**.
- Essentially, it is a **projective measurement device** for photon polarization.

In Quantum View

If a photon is in polarization state:

$$|\psi\rangle = \alpha|H\rangle + \beta|V\rangle$$

and the polaroid is oriented along **horizontal (H)** axis:

- Probability photon passes = $|\alpha|^2$.
- Probability photon is absorbed = $|\beta|^2$.
- If it passes, the photon collapses to state $|H\rangle$.

If the polaroid is oriented at angle θ, it transmits the state:

$$|\theta\rangle = \cos\theta|H\rangle + \sin\theta|V\rangle$$

Malus' Law (Classical-Quantum Link)

- When polarized light passes through a polaroid at angle θ with respect to the polarization direction:

$$I = I_0 \cos^2\theta$$

where I_0 is the initial intensity and I is the transmitted intensity.

- In quantum terms, $\cos^2\theta$ is the **probability** that a photon passes.

A **polaroid** acts like a **quantum measurement device** for photon polarization. It projects photons into the polarization direction aligned with its axis, with transmission probabilities governed by **Malus' law**.

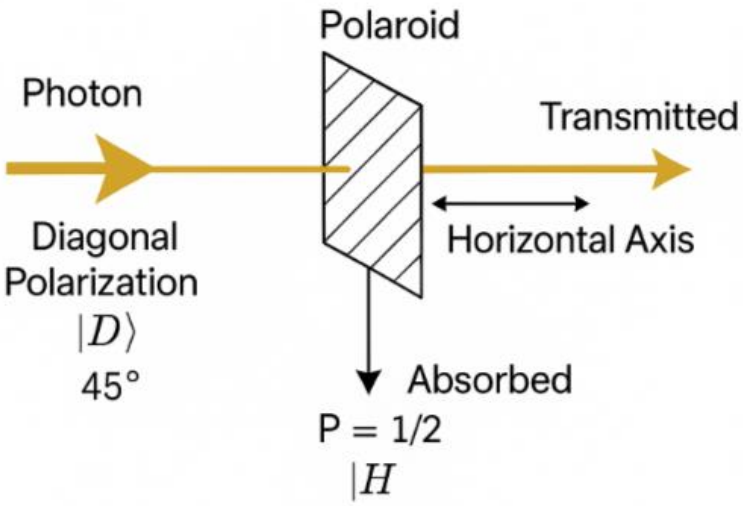

Examples

(a) Horizontal Polarization

- Photon: $|H\rangle = \begin{bmatrix} 1 \\ 0 \end{bmatrix}$
- Polaroid: Horizontal axis → photon always passes ($P = 1$).
- Polaroid: Vertical axis → photon always blocked ($P = 0$).

(b) 45° Diagonal Polarization

- Photon: $|D\rangle = \frac{1}{\sqrt{2}}(|H\rangle + |V\rangle)$
- Polaroid: Horizontal axis → probability $P = |\frac{1}{\sqrt{2}}|^2 = 0.5$.
- Interpretation: Half the photons pass, half are blocked.

(c) General Angle

- Photon: $|\psi\rangle = |H\rangle$ (horizontal).
- Polaroid: Oriented at $\theta = 30°$.
- Probability of passing = $\cos^2(30°) = 0.75$.
- Meaning: 75% of photons pass through.

A Simple Experiment

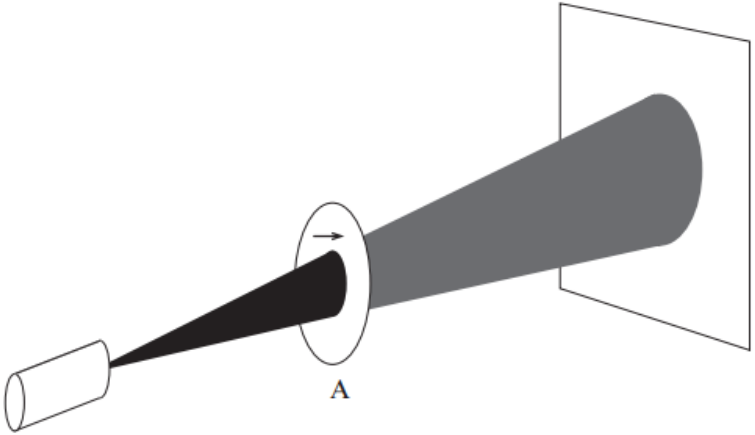

Figure 2.1
Single polaroid attenuates unpolarized light by 50 percent.

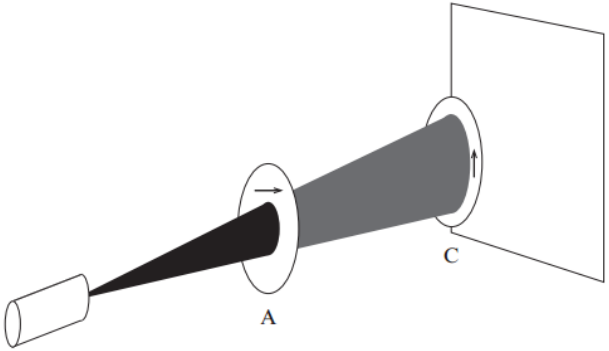

Figure 2.2
Two orthogonal polaroids block all photons.

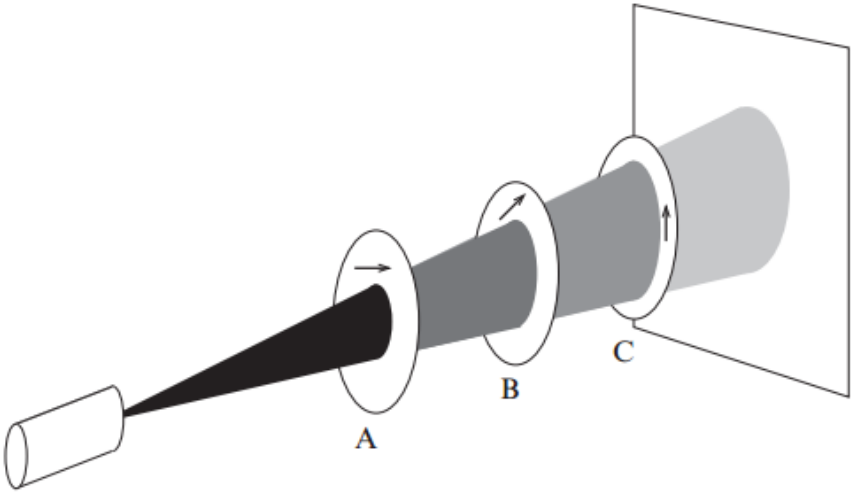

Figure 2.3
Inserting a third polaroid allows photons to pass.

A Quantum Explanation

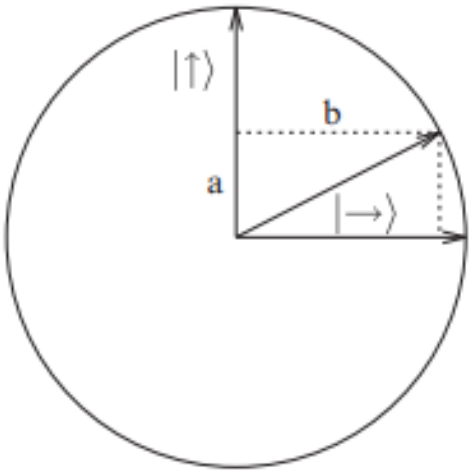

$$|v\rangle = a|\uparrow\rangle + b|\rightarrow\rangle$$

Figure 2.4
Measurement of state $|v\rangle = a|\uparrow\rangle + b|\rightarrow\rangle$ by a measuring device with preferred basis $\{|\uparrow\rangle, |\rightarrow\rangle\}$.

- **Setup:**
  - Shine light on a screen.
  - Insert polaroid A (horizontal) → half intensity passes.
  - Insert polaroid C (vertical, orthogonal to A) → no light passes.
  - Insert polaroid B (at 45° between A and C) → surprisingly, some light passes.
- **Classical Expectation:**
  - Additional filters should further block light.
- **Quantum Explanation:**
  - Photon polarization is represented by states $|\uparrow\rangle$ and $|\rightarrow\rangle$.
  - After A: photons are in $|\rightarrow\rangle$.
  - Express $|\rightarrow\rangle$ in terms of $|\nearrow\rangle$ and $|\nwarrow\rangle$ (superposition).
  - With B inserted, photons collapse into $|\nearrow\rangle$ with probability ½, allowing some to pass C.

- **Importance:**
  - Demonstrates **superposition** and **basis-dependent measurement**.
  - Shows how probabilities arise from amplitudes.
  - Provides a physical basis for defining **qubits** using polarization states.
- **Conclusion:**
  - This experiment is a simple but powerful demonstration of how quantum mechanics departs from classical intuition and motivates quantum information concepts.

Sample Questions

1. Explain the photon polarization experiment with polaroids as an illustration of quantum mechanics. Discuss its importance in defining qubits and the principles of measurement.
2. Describe in detail the differences between classical computation and quantum computation. How do qubits, superposition, and entanglement redefine the model of computation?
3. Explain the development of quantum computing from its origins to Shor's and Grover's algorithms. Why was this shift from classical to quantum computation significant?
4. Discuss in detail the photon polarization experiment with polaroid. How does quantum mechanics, through superposition and measurement, explain the results that seem impossible in classical physics?
5. Compare and contrast classical bits and qubits. Explain why qubits are more powerful, and also describe the limitations of extracting information from them.
6. Discuss the differences between classical bits and quantum bits (qubits) with examples.
7. Differentiate between a classical bit and a qubit.

No-Cloning Theorem

- It is impossible to create an identical copy of an arbitrary unknown quantum state.
- This contrasts with classical information, where you can copy a file or a bit ($0 \rightarrow 00$, $1 \rightarrow 11$) perfectly.
- Perfect cloning of an unknown quantum state is **impossible**

Importantance:

- Ensures the **security** of quantum key distribution (like BB84).
- Prevents **perfect copying of quantum information**, which would allow an eavesdropper to intercept and duplicate quantum messages without being detected.

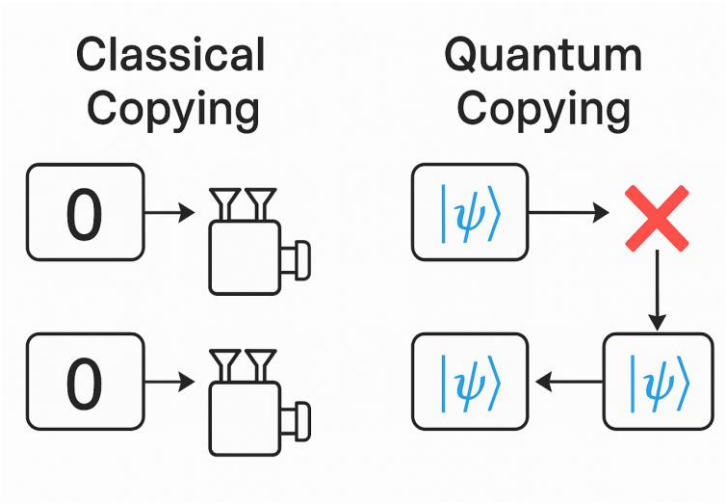

- Cannot build a universal machine that makes **perfect copies** of arbitrary unknown quantum states.
- Because of the **linearity** of quantum mechanics and is a key reason why **quantum cryptography is secure**

Relative phase and Global phase in quantum states

- Phases are crucial because quantum states are represented as complex vectors in Hilbert space.
- Global phase has **no observable effect**. Two states that differ only by a global phase are **physically indistinguishable**.
- Relative phase **affects interference and measurement outcomes**.

➢ **Global phase → irrelevant**

Cannot be measured.

Does not affect interference or probabilities.

➢ **Relative phase → crucial**

Determines **quantum interference patterns**.

Distinguishes different qubit states.

Used in quantum gates (e.g., Z gate introduces a relative phase).

Aspect	Global Phase	Relative Phase
Effect on Measurement	No effect — measurement probabilities remain unchanged.	Affects measurement outcomes and interference patterns.
Physical Significance	Not observable; states differing only by global phase are equivalent.	Observable and crucial; determines interference, quantum gates, and superposition properties.
Role in Quantum Computing	Ignored — quantum algorithms are invariant to global phase.	Essential — relative phases are manipulated to perform computation (e.g., Hadamard, Phase, Z gates).
Bloch Sphere Representation	Does not change the position on the Bloch sphere.	Changes the angle/position on the Bloch sphere (rotation around Z-axis).

- **Global phase** = irrelevant, unobservable, “mathematical redundancy.”
- **Relative phase** = critical, affects interference and quantum computation.

BB84 quantum key distribution protocol

- Charles Bennett & Gilles Brassard (1984).

Objective: To allow two parties (traditionally called **Alice** and **Bob**) to establish a **shared secret key** securely, even if an eavesdropper (**Eve**) tries to intercept.

- It uses the **principles of quantum mechanics** — specifically, the properties of single qubits (like photons with polarization) — to ensure security.
- Qubits cannot be copied (no-cloning theorem).
- Measurement disturbs quantum states.
- If Eve tries to measure, she introduces detectable errors.

Alice and Bob can detect eavesdropping and only keep a secure key if the channel is safe.

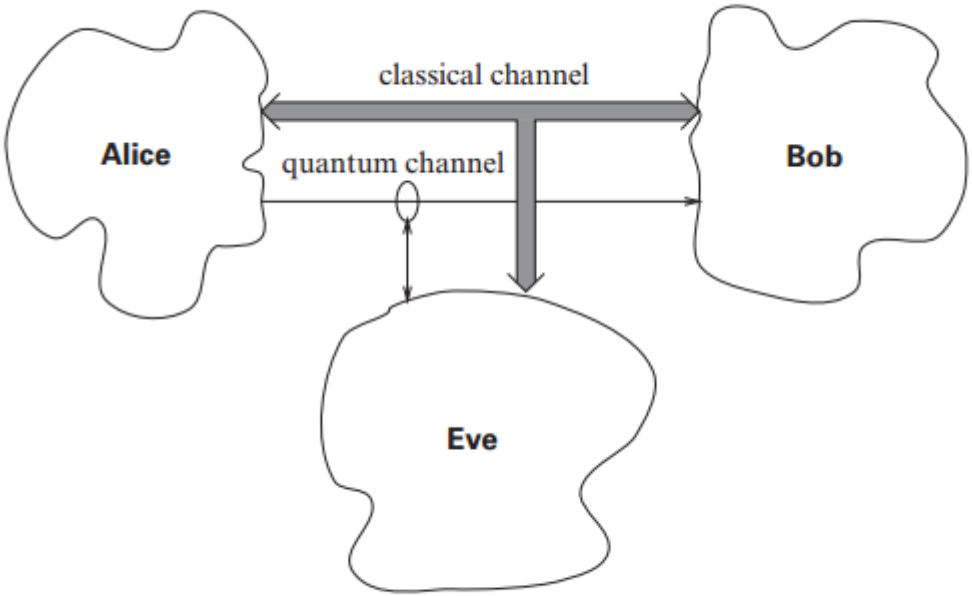

Figure 2.5
Alice and Bob wish to agree on a common key not known to Eve.

Basis refers to a set of quantum states that can be used to represent any other state in a Hilbert space (the mathematical space where quantum states "live").

Protocol Steps

Step 1: Alice prepares qubits

- Alice wants to send random bits (0s and 1s).
- She encodes each bit randomly in one of two bases:
  - **Rectilinear Basis (+):**
    - $|0\rangle$ = Horizontal polarization (→)
    - $|1\rangle$ = Vertical polarization (↑)
  - **Diagonal Basis (×):**
    - $|0\rangle$ = 45° polarization (↗)
    - $|1\rangle$ = 135° polarization (↖)
- Example: Alice wants to send bits 1010. She randomly chooses bases for each.

Step 2: Alice sends qubits to Bob

- She transmits the photons (encoded qubits) to Bob over a **quantum channel**.

Step 3: Bob measures qubits

- For each photon, Bob randomly chooses a basis (either + or ×) to measure.
- If Bob's basis matches Alice's, he gets the **correct bit**.
- If not, his result is **random (50% chance of error)**.

Step 4: Basis Reconciliation

- Alice and Bob **publicly announce** (over a classical channel) **which bases they used** (but not the bit values).
- They discard all results where their bases don't match.
- The remaining results form the **raw key**.

Step 5: Error Checking (Eavesdropper detection)

- Alice and Bob randomly **compare a subset of their raw key**.
- If too many errors are detected → Eve is present → they discard the session.
- If errors are low → they proceed.

Step 6: Key Distillation

- Apply **error correction** and **privacy amplification** to remove any remaining Eve's knowledge.
- Final result: a **shared secret key**.

Example

- **Alice's random bits: 1 0 1 0**
- **Alice's random bases:** + × + ×

So she encodes as:

1 in + → Vertical (↑)

0 in × → 45° (↗)

1 in + → Vertical (↑)

0 in × → 45° (↗)

Bob's random bases: × × + +

Now Bob measures:

First photon: Alice used +, Bob used × → Wrong basis → random result (maybe 0).

Second photon: Alice ×, Bob × → Correct → gets 0.

Third photon: Alice +, Bob + → Correct → gets 1.

Fourth photon: Alice ×, Bob + → Wrong → random (maybe 1).

After Basis Announcement

They compare bases:

Photon 1: Alice +, Bob × → discard.

Photon 2: Both × → keep (bit = 0).

Photon 3: Both + → keep (bit = 1).

Photon 4: Different → discard.

So the **raw key = 01** (shared between Alice & Bob).

Security Against Eve

- If Eve intercepts and measures, she doesn't know which basis Alice used.
- With 50% chance, she chooses the wrong basis and introduces errors.
- When Alice and Bob check some portion of their raw key, they detect these errors.
- If error rate < threshold → safe.
  If error rate high → Eve is present → discard

Applications

- Used in **Quantum Cryptography** for secure communication.
- Practical implementations exist in optical fibers and satellite links.
- Provides **information-theoretic security** — impossible to break even with quantum computers.

BB84 uses **random encoding of bits into non-orthogonal bases**, guarantees security via quantum mechanics, and enables two parties to establish a shared key securely.

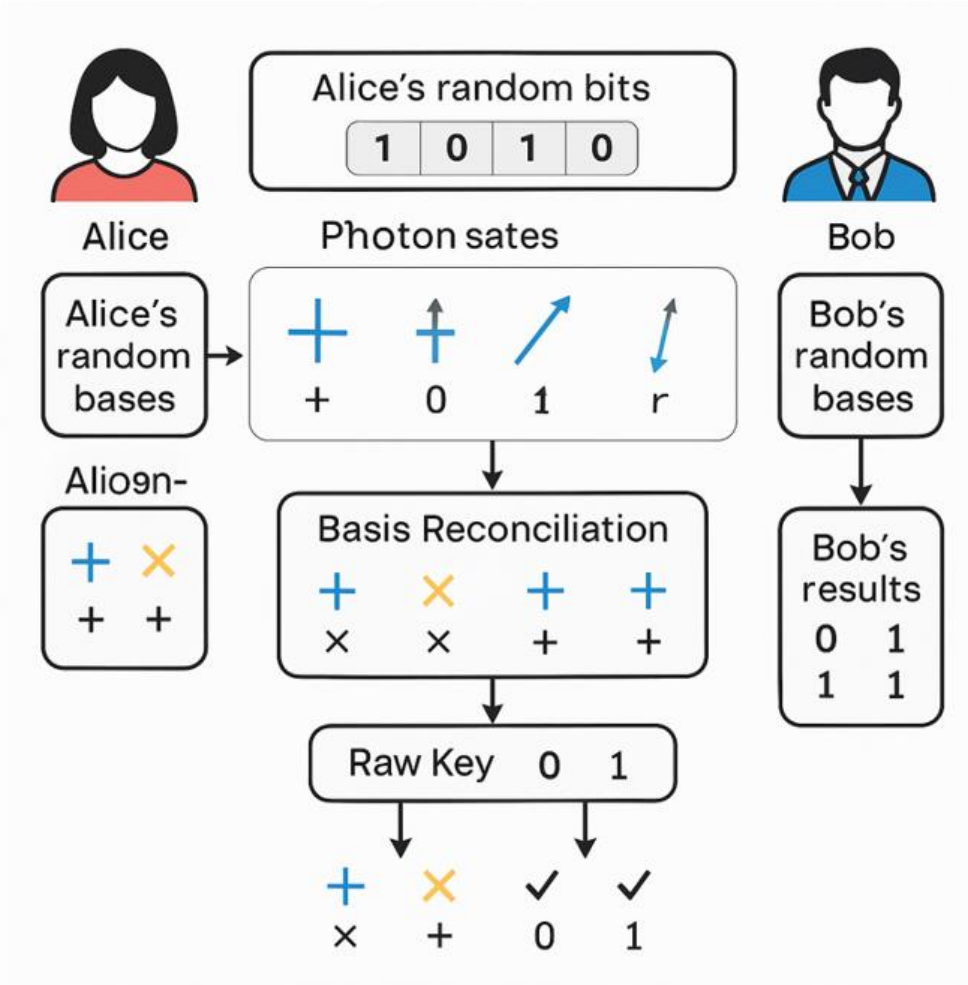
Alice's random bits
1 0 1 0
Alice
Photon sates
Bob
Alice's random bases
+ 0 1 r
Bob's random bases
Alio9n-
+ +
Basis Reconciliation
× × + +
Bob's results
0 1
1 1
Raw Key 0 1
× + 0 1

Numerical Problems

Problem. A horizontally polarized photon $|H\rangle$ passes sequentially through three ideal polaroids with transmission axes at 0°, 45°, and 90°.

(a) What is the final transmission probability?

(b) If the middle polaroid is removed, what is the transmission probability?

Solution. Use Malus' law $P = \cos^2 \Delta\theta$.

(a) $0^\circ \to 45^\circ$: $P_1 = \cos^2 45^\circ = 1/2$.

State becomes $|45^\circ\rangle$. Then $45^\circ \to 90^\circ$: $P_2 = \cos^2 45^\circ = 1/2$.

Total $P = P_1 P_2 = 1/4 = 0.25$.

(b) Direct $0^\circ \to 90^\circ$: $P = \cos^2 90^\circ = 0$.

Problem. A photon at 30° to horizontal hits a polarizer at 0°. Compute the pass probability and the post-selected state.

Solution. $P = \cos^2 30^\circ = (\sqrt{3}/2)^2 = 3/4.$

Post-selected state is $|H\rangle$ (horizontal).

Problem. Alice sends $N = 10{,}000$ qubits with random bases. Bob chooses bases randomly too. Channel has no noise.

(a) Expected sifted key length?

(b) If Eve uses intercept-resend, what QBER (error %) do Alice and Bob see on the sifted key?

Solution. (a) Bases match with prob $1/2 \to 5000$ bits.

(b) Eve guesses wrong basis with prob $1/2$ and then causes $1/2$ errors on those $\to 1/4$ on sifted bits = 25% QBER.

Exercise 2.9. In the BB84 protocol, how many bits do Alice and Bob need to compare to have a 90 percent chance of detecting Eve's presence?

Exercise 2.10. Analyze Eve's success in eavesdropping on the BB84 protocol if she does not even know which two bases to choose from and so chooses a basis at random at each step.

a. On average, what percentage of bit values of the final key will Eve know for sure after listening to Alice and Bob's conversation on the public channel?

b. On average, what percentage of bits in her string are correct?

c. How many bits do Alice and Bob need to compare to have a 90 percent chance of detecting Eve's presence?

VTU info on Quantum

https://analyticsindiamag.com/ai-news-updates/vtu-qnu-labs-to-establish-quantum-lab-in-bengaluru-to-train-4-lakh-engineers/

VTU, QNu Labs to Establish Quantum Lab in Bengaluru to Train 4 Lakh Engineers

About us | Indian IT | Startups | AI News

Published on October 10, 2025 • In AI News

VTU, QNu Labs to Establish Quantum Lab in Bengaluru to Train 4 Lakh Engineers

The partnership will introduce minor degree programmes in quantum technology, with plans for a dedicated master's course.

Virtual / Visual Quantum Labs & Simulators

Tools where you can drag-and-drop, visually assemble components or circuits, or explore quantum phenomena interactively.

Virtual Lab by Quantum Flytrap

https://quantumflytrap.com/virtual-lab/

A no-code online lab simulating an optical table; supports experiments with up to three entangled particles, quantum circuits (Deutsch-Jozsa etc.), cryptography, teleportation, Bell tests, etc.

IBM Quantum / IBM Quantum Experience / Composer

https://quantum.cloud.ibm.com/

Has a visual circuit composer, lets you build circuits and run them (on simulators or real backend) via Qiskit etc.

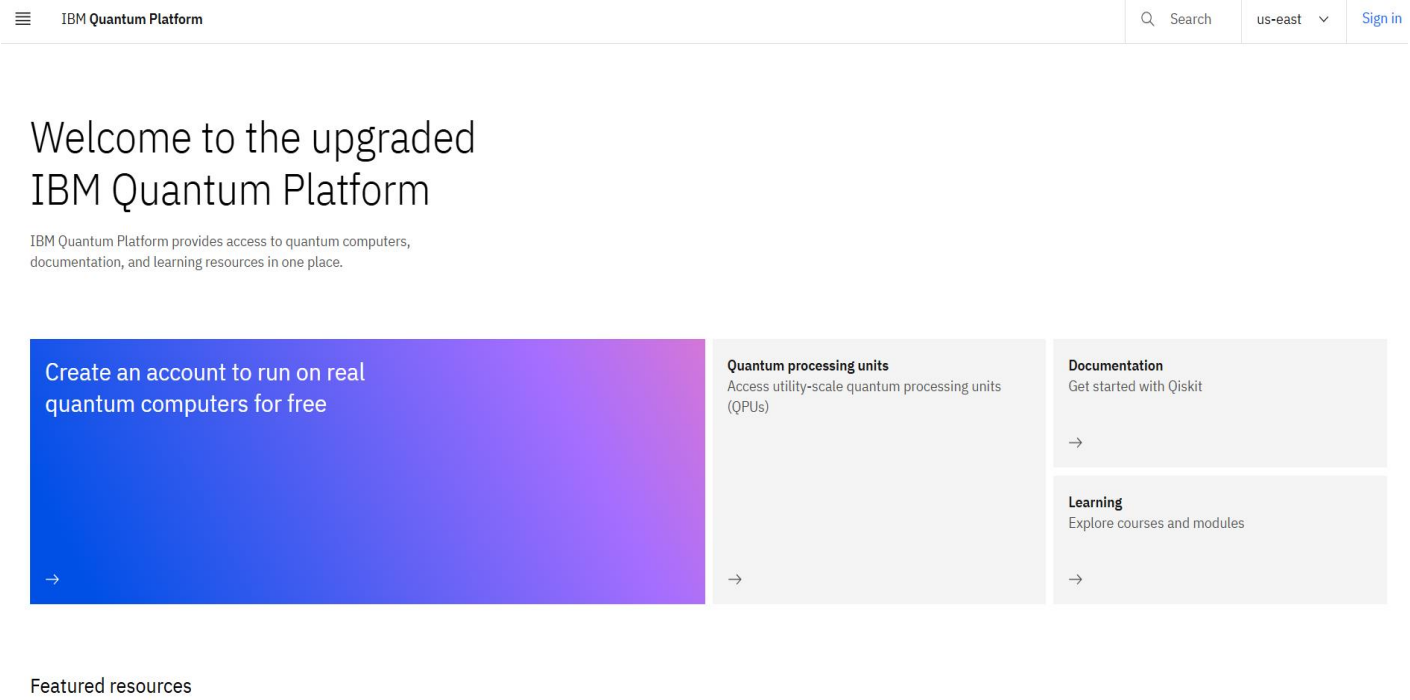

Quantum Circuit Simulator (The Quantum Länd)

https://thequantumlaend.de/quantum-circuit-designer/

A drag-and-drop circuit builder, translates to QASM, simulates up to ~10 qubits in browser.

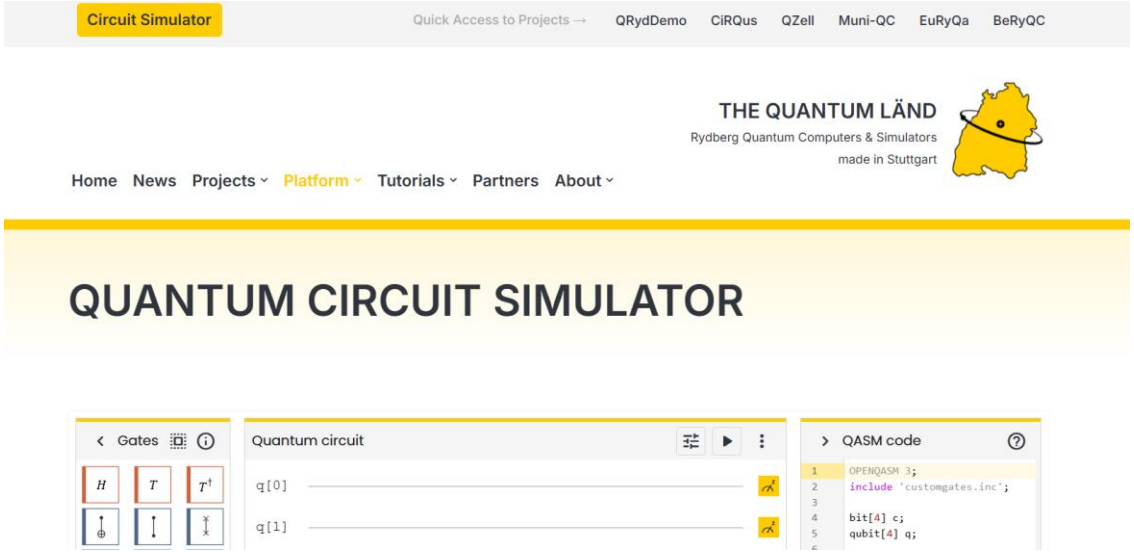

Quantum Computing Playground

https://www.quantumplayground.net/#/home

Online tool that can simulate up to ~22 qubits, run algorithms like Grover and Shor, with visualizations

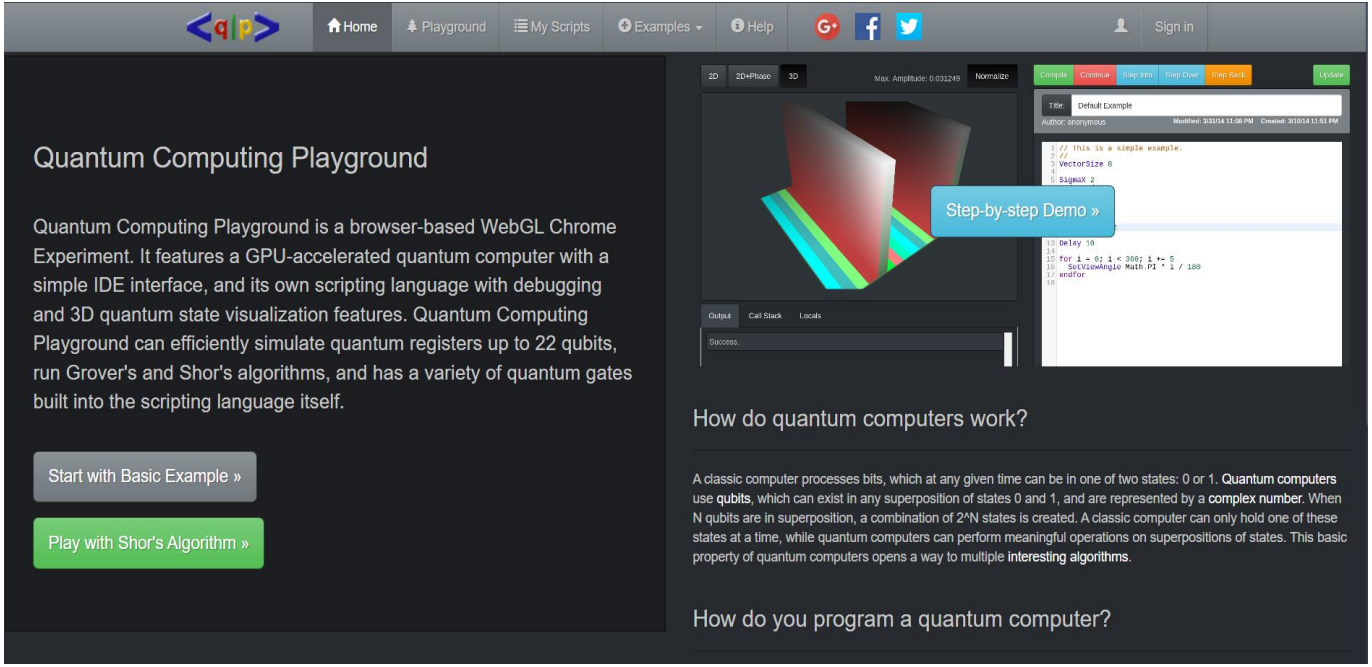

QSim Workbench (Quantum Computing Toolkit, from India / IISc

A GUI workbench for designing quantum circuits, simulating them (including noise), editing Python code, etc.

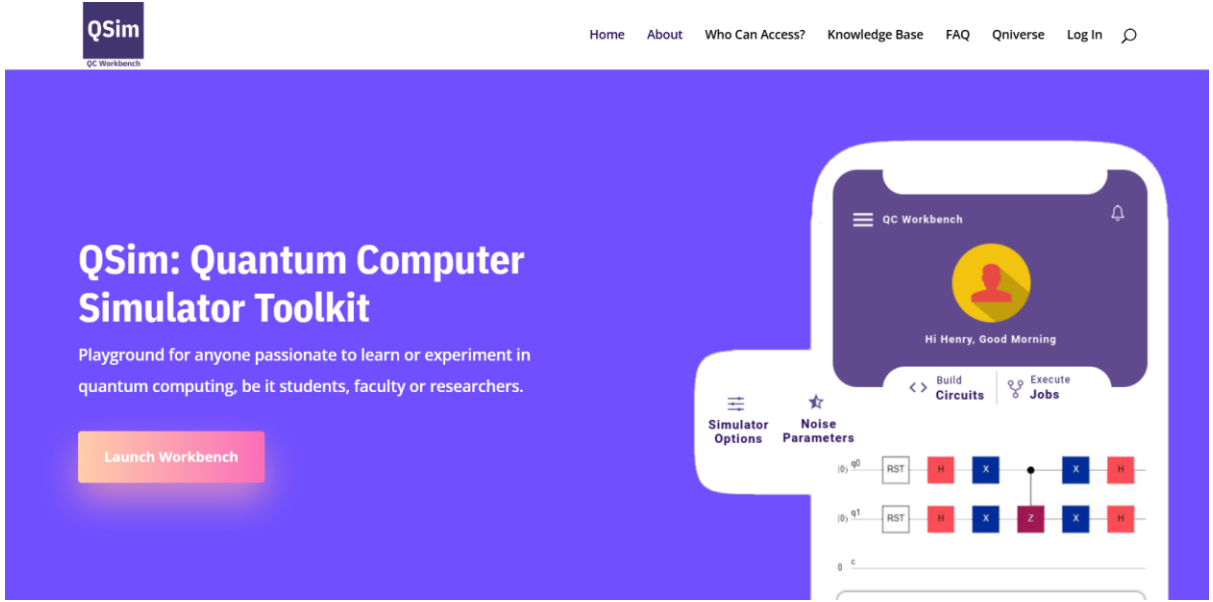

Programming / Framework / Backend Simulators & Virtual Machines

These are more “backend / code-based” environments or simulators useful for developing algorithms or integrating into research workflows.

Google's Quantum Virtual Machine (QVM) via Cirq

https://quantumai.google/cirq/simulate/quantum_virtual_machine

A "virtual quantum processor" that you can run circuits on with noise models, etc., integrated with Cirq

Cirq

Overview | Start | Build | Simulate | Transform | Hardware | Noise | Experiments | Contribute | Reference

Filter

Overview
Exact Simulation
Noisy Simulation
Parameter Sweeps
State Histograms

Quantum Virtual Machine
Quantum Virtual Machine
QVM Creation Template
QVM Basic Example
QVM Stabilizer Example
Virtual Engine Interface

Google Quantum AI > Software > Cirq > Simulate

Was this helpful?

Quantum Virtual Machine

Run in Google Colab | View source on GitHub | Download notebook

The quantum virtual machine is a virtual Google quantum processor that you can run circuits on by using the virtual engine interface. Behind this interface, it uses simulation with noise data to mimic Google quantum hardware processors with high accuracy: In internal tests, the virtual and actual hardware are within experimental error of each other. Additionally, it supports internal use of the high-performance qsim simulator, for fast execution of larger circuits. The QVM should be used as a preparation step before running on Google hardware, and as a substitute for Google hardware when it is not available.

If you just want to use the QVM for realistic noisy simulation, you can copy and build upon the QVM Creation Template, which provides a concise and portable way to instantiate an `Engine` class that you can realistically simulate circuit runs with. After doing so, skip forward to the How to use a QVM section. If you're interested in how the QVM is prepared for use, continue on to the following section.

On this page
Setup
How to build a QVM
Choose a processor to virtualize
Build a noisy simulator with a hardware noise model
Set up the virtual engine with a virtual processor, packaging in the noisy simulator
How to use a QVM

qsim

https://quantumai.google/qsim

A high-performance wavefunction simulator (C++) used by Google, integrated with Cirq, capable of simulating large circuits efficiently.

qsim

Overview | Tutorials | Guides | Python Reference | C++ Reference

qsim

Optimized quantum circuit simulators

qsim

qsim is a full state-vector simulator written in C++. It uses gate fusion, AVX/FMA vectorized instructions, and multithreading using OpenMP to achieve state-of-the-art simulations of quantum circuits. qsim is integrated with Cirq and can be used to run simulations of up to 40 qubits on a 90-core Intel Xeon workstation.

Get started with qsim in Cirq | GitHub repository for qsim

```
import cirq
import qsimcirq

# Pick up to ~25 qubits to simulate (requires ~256MB of RAM)
qubits = [cirq.GridQubit(i,j) for i in range(5) for j in range(5)]

# Define a circuit to run
# (Example is from the 2019 "Quantum Supremacy" experiement)
circuit = (cirq.experiments.
    random_rotations_between_grid_interaction_layers_circuit(
    qubits=qubits, depth=16))

# Measure qubits at the end of the circuit
```

Thank you